摆线针轮减速机
Cycloid reducer

一、前 言
FOREWORD

行星摆线针轮减速机，是一种应用行星传动原理，采用摆线针齿啮合，设计先进，结构新颖的减速机构。

该减速机可以广泛应用于各种传动机械中的减速机构，如：起重、运输、矿山、冶金、石化、纺织、印染、轻工、制药、粮食、饲料、食品机械等等。

Planet cycloidal pin gear reducer is a speed reducing construction with advance design, novel structure adopting the principle of planet driving and the falling-in of cycloidal pin gear, This reducer can be widely applied to the speedreducing structure of various driving machineries, such as; lift, transportation, mine, metallurgy, petrolchemical, texitile, prention, light industry, pharmacy, food, forage, food machinery, tec.

二、传动原理与结构
DRIVING PRINCIPLE & CONSTRUCTION

行星摆线针轮减速机的传动原理如图1如示：

输入轴1和转臂3一起绕中心Ob顺时针方向回转时，摆线轮2即随转臂一道绕中心Ob公转。由于固定在针齿壳5上的针齿的反作用使摆线轮绕其本身中心OC逆时针方向自转，并通过销套销轴将其自转等速传递给输出轴4，故输出轴就得到了与输入轴相反转向的运动（输入轴转动一周，输出轴摆线轮转动-1/Ec周），其减速比为：

The Driving Principle of Planet cycloidal pin gear reducer is showed in the diagram 1.

When input shaft 1 and rotating arm 3 are rotating around the OB Axis in chocdwise the cycloidal gear 2 will rotate around the Sxis OB togethert the rotating arm. The cycloidal gear will self-rotating around OC in countclockwise due to the counteraction of pin gear fixing in the pin gear shell 5, meanwhile, the self-rotation speed will be passed to output shaft 4 through pin shaft, as result, the output obtain the contrary movement against input shaft. (When input shaft rotate one cycle, the output cycloidal grat will rotate -1/EC cycle.), its velocity-reducing ratio is:

$i=(Ec-Eb)/Ec=-1/Ec$　其中: $Ec-Eb)=-1$　$i=(Ec-Eb)/Ec=-1/Ec$　among it: $Ec-Eb=-1$

Ec--摆线轮齿数　Eb--针齿齿数　Ec－Tooth No. If cycloidal gear, Eb－pin gear No.

由上式可知当输入轴转Ec转时输出轴则反向转1转

According to above formula, shen input shaft rotate Ec cycles, the output shaft will rotate one cycle in counterdirection.

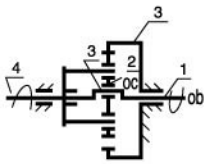

1.输入轴	1.Input shaft
2.摆线轮	2.Cycloidal gear
3.转臂	3.Rotating arm
4.输出轴	4.Output shaft
5.针齿壳	5.Pin gear shell

图1 传动原理　Siagram 1 Driving Principte

行星摆线针轮减速机全部传动装置可分为三部分：输入部分；减速部分；输出部分。

The entire Driving Assembly can be divided into three parts; input part; speed-reducing part; output part.

三．特　点
CHARACTERISTICS

1、减速比大；一级减速时速比为1/11－1/87；二级减速时速比为1/121－1/5133；三级减速时速比为1/2057－1/446571；根据需要可以采用更多级组合。

2、传动效率高：由于该机啮合部位采用了滚动啮合，故效率可达90%以上。

1. Big Volecity-Reducing Ratio: for single-stage speed-reducing, the ratio is 1/11 －1/87; double-stage speed-reducing, the ratio is 1/121 －1/5133; three-stage speed reducing, the ratio is 1/2057－1/446571; we can adopt more-stages compound according the requirement.

2. High Driving efficiency: the driving effciency can reach above 90% due to adopting rolling engagement in falling-in part.

德州向力减速机械有限公司0534-2609682

3、体积小，重量轻：由于不仅采用了行星传动原理，输入轴和输出轴在同一轴线上，而且有与电动机直联呈一体的独特之处，因而本机具有结构紧凑，体积小，重量轻的特点。

4、故障少，寿命长：本机主要转动啮合件采用轴承钢制造，因此机械性能好，耐磨性好，再加采用滚动摩擦，故使之故障少，寿命长。

5、运转可靠平稳，本机传动过程中为多齿啮合，所以使之运转平稳可靠，噪声小。

6、拆装方便，容易维修：由于结构设计合理拆装简单便于维修。

7、本机还具有过载能力强，耐冲击、惯性力矩小、适用于起动频繁和正反转的特点。

3. Small volume, light weight: this machine has compacted structure, small volume and light weight because of adopting the priciple of planet driving so that the input shaft and output shaft in the same axis, moreover, they will integrated with the motor.

4. Few troubles, long life: this machine has good resistance to abrasion because the main driving engaging parts are made of bearing steel and applying rolling friction.

5. Stable Running: For most driving procedure, we adopt multi-teeth falling-in. so the running will be stable and little noise.

6. Convenient dismounting, easy maintanance: Due to reasonable structure and design.

7. This machine also are of the characteristics such as strong overloading ability, anti-compact, Samll inertial moment, which are suitable for frequently start and double-side rotation.

四、技术规格

TECHNICAL DATA

1、机型号：Frame size

按机型分为：Z系列X系列和B系列

按传动比分为：一级、二级、三级

一级Z系列X系列有11种：1、2、3、4、5、6、7、8、9、10、11；

B系列有9种：0、1、2、3、4、5、6、7、8；

两级有10种：42、53、63、74、84、85、95、106、116、117；

三级有10种：642、742、842、852、853、952、953、1063、1164、1174；

按结构型式分为：卧式、立式、双轴型、直联型四种。

以上是我公司生产的标准减速机，此外，为了满足用户需要还可以承接非标设计制造。

Divided into Z series, X series and B serise according to Frame size.

Divided into single stage, double stage and three-stage according to Driving Ratio.

Among single stage Z series X series, they are: 1, 2, 3, 4, 5, 6, 7, 8, 9, 10, 11;

B series they are: 0, 1, 2, 3, 4, 5, 6, 7, 8;

The double stage they are: 42, 56, 63, 74, 84, 85, 95, 106, 116, 117;

The three stage, they are: 642, 742, 842, 852, 853, 952, 953, 1063, 1164, 1174;

Divided into horizontal-type, vertical-type, double-shaft and direct-connection type according to their construction.

The above are the standard speed-reducer of our company, furthermore, customerís special order also can be accepted;

2、减速比: Drive ratio

一级减速比有：标准速比：11、17、23、29、35、43、59、71、87；

非标速比：9、13、15、25、46；

Single Stage Drive Ratio:

Standard ratio are: 11, 17, 23, 29, 35, 43, 59, 71, 87;

Non-standard ratio are: 9, 13, 15, 25, 46;

德州向力减速机械有限公司0534-2609682

二级减速比有：121、187、289、391、473、493、595、731、841、1003、1225、1505、1849、2065、2537、3481、5133

三级减速比有：2055-446571

Double Stage Driver Ratio: 121, 187, 289, 391, 473, 493, 595, 731, 841, 1003, 1225, 1505, 1849, 2065, 2537, 3481, 5133.

The above are the standard speed-reducer of our factory, furthermore, customerís special order also can be accepted.

Three stage transmission ratio: 2055-446571

说明：

(1)型号表示方法示例中无字母“D或Y”者为双轴型，有字母“D或Y”者为电动机直联型。

(2)在两级和三级减速机中各级减速比的组合，原则上以第一级（高速端）为减速比小的一端，而第二级或第三级（即低速端）为减速比大的一端。

(3)Z系列X系列电动机功率表示在前，机型号表示在后，其他系列则相反。

Description:

(1) In the construction of model No.ìDî or ìYî denote the motor direct-commection type, non ìDî or ìYî denote the double shaft type.

(2) In the compound of driving ratio between Double stage and Three Stage, principly, the samll ratio should be the ìfirst stageî (high speed side), and the big ratio should be the second stage or third stage (low speed side).

(3) For Z Series and X Series, the power denotes at front, the frame size at behind, for other series, contrary.

3、摆线针轮减速机动力源配置规定：Type of power Source to be equipped

普通电动机-D Normal Motor-D	调速电机-T Speed-regulating Motor-T	油马达-M Oil Motor-M
防爆电机-B Anti-explosion Motor-B	制动电机-N Braking Motor-N	本公司目前生产的摆线减速机均采用Y系列电动机配套。 All the cycloidal speed reducer of our company are equipped by Y Series Motors.
直流电机-Z DC Motor-Z	低噪声电机-S Low-noise Motor-s	

4、型号表示方法：Construction of model

Z系列（等同国家标准）Z Series (equivalent to state standard)

一级：
sing stage

Z W D 1.5－4－1/43

- 减速比 Drive Ratio
- 机型号 Frame Size
- 电动机功率为1.5千瓦 Motor Power 1.5KW
- 与电动机直联 Directly-connected into motor
- 卧式(立式用L表示) Horizontal-type (L for vertical-type)
- Z系列摆线针轮减速机 Z Series Cyclidal Pin Gear Reducer

二级：
double stage

Z L E D 4－95－1/187

- 总减速比1/187 (17X11) General Drive Ratio 1/187 (17X11)
- 9号与5号机型组合 The Compound of No.9 & No.5
- 电动机功率为4千瓦 Motor Power 4KW
- 与电动机直联 Directly conneceted to Motor
- 二级减速机 Double stage speed reducer
- 立式(卧式用W表示) Vertival-type (W denotes Horizontal-type)
- Z系列摆线针轮减速机 Z Series Cyloidal Pin Gear Reducer

德州向力减速机械有限公司0534-2609682

X系列(等同天津标准) X series (equivalent to Tianjin standard)

一级 single stage

X W D 1.5－4－1/43

- 减速比 Drive Ratio
- 机型号 Frame Size
- 电动机功率为1.5千瓦 Motor Power 1.5KW
- 与电动机直联(不带则不写) Directly-connected to Motor (Without denotationi if not equipped)
- 卧式(立式用L表示) Horizontal-type (L denotes vertical-type)
- X系列摆线针轮减速机 X Series Cysloidal Pin Gear Reducer

二级 double stage

X L E D 4－95－1/187

- 总减速比1/187(17X11) General Drive Ratio 1/187(17X11)
- 9号与5号机型组合 The compound of No.9 & No.5
- 电动机功率为4千瓦 Motor Power 4KW
- 与电动机直联(不带则不写) Directly connected to Motor (Without denotationi if not equipped)
- 二级减速机 Double stage speed reducer
- 立式(卧式用W表示) Vertical-type (W denotes Horizontal-type)
- X系列摆线针轮减速机 X Series Cycloidal Pin Gear Reducer

B系列(等同上海标准) B series (equivalent to Shanghai standard)

一级 single stage

B W Y 13－17－5.5

- 电动机功率为5.5千瓦 Motor Power 5.5KW
- 减速比 Drive Ratio
- 13号机型 No.13 Frame size
- 与电动机直联(不带则不写) Directly connected to Motor (Without denotationi if not equipped)
- 卧式(立式用L表示) Horizontal-type (L denotos vertical-type)
- B系列摆线针轮减速机 B Series Cycloidal Pin Gear Reducer

二级 double stage

B L E Y 40－1.5－17X11

- 总减速比(17X11) General Drive Ratio (17X11)
- 电动机功率为1.5千瓦 Motor power 1.5KW
- 4号与1号机型组合 The compound of No.4 & No.1
- 与电动机直联(不带则不写) Directly connected to Motor (Without denotationi if not equipped)
- 二级减速机 Duoble stage speed reducer
- 立式(卧式用W表示) Vertical-type (W denotes Horizontal-type)
- B系列摆线针轮减速机 B Series Cycloidal Pin Gear Reducer

B系列(等同化工部标准) B series (equivalent to standard of Ministry of Chemical Industry)

一级 single stage

B L D5.5－3－17

- 传动比 Drive Ratio
- 机型号 Frame Size
- 电机直联型5.5(KW) Directly connected to motor, 5.5KW
- 立式安装(卧式用W表示) Vertically mountin (W denotes Horizontal type)
- 摆线针轮减速机 Cycloidal pin gear reducer

二级 double stage

B W E31－187(17X11)

- 二级传动比 Double Stage Drive Ratio
- 二级机型号 Double Stage Frame Size
- 双轴型卧式安装 Horizontal-type mounting of double shaft model
- 摆线针轮减速器 Cycloidal pin gear reducer

德州向力减速机械有限公司0534-2609682

B系列(等同机械部标准) B series (equivalent to Standard of Ministry of Machine-Building Industry)

一级
single stage

BWY(BW) 15－11－2.2

- 功率值(KW)
  Power Value(KW)
- 传动比
  Drive Ratio
- 机型号
  Frame size
  (针齿中心圆直径为15cm)
  (The central cycleís diameter of pin gear is 15cm)
- 型式代号
  Code of frame size
  (BWY为卧式电机直联型BW为卧式双轴型)
  (BWY denotes horizontal-type Direct connection model, BW denotes horizontal double shaft model)

二级
double stage

B W E Y 27 15–17X11–1.5

- 功率值(KW)
  Power Value(KW)
- 传动比
  Drive Ratio
- 机型号
  Frame Size
  (高速级针齿中心圆直径为15cm)
  (The central cycleís diameter of low-speed pin gear, 15cm)
- 机型号
  Frame Size
  (低速级针齿中心圆直径为27cm)
  (The central cycleís diameter of low-speed pin gear, 27cm)
- 电动机直联
  Directly-connected Motor
- 减速级数
  Speed-reducing stage
- 卧式安装形式
  Horizontally mounting model
- 摆线针轮减速器
  Cycloidal pin gear reducer

JXJ系列(等同江门标准) JXJ series (equivalent to Jiangmen standard)

一级
single stage

JXJ L 4－43－5.5

- 电动机功率为5.5千瓦
  Power, 5.5KW
- 减速比
  Drive Ratio
- 4号机型
  Frame size
- 立式结构(卧式用W表示)
  Vertical structure
  (W denotes horizontal type)
- JXJ系列摆线针轮减速机(无电机XJ)
  JXJ Series cycloidal reducer
  (XJ denotes non motor)

二级
double stage

JXJ L E D 63－187－4

- 功率值(KW)
  Power Value(KW)
- 总传动比
  General Drive Ratio
- 组合机型号6号机型与3号机型
  Compounded frame size, No.6 & No.3
- 电机直联
  Directly-connected motor
- 二级减速
  Double stage reducing
- 立式(卧式用W表示)
  Vertical-type (W denotes horizontal type)
- 摆线针轮行星减速机型
  Cycloidal pin gear planet reducing size

德州向力减速机械有限公司0534-2609682

5、单级减速机的各系列机型对照及技术参数表

Single stage Reducer Contrast different Frame Size and technical data:

表一 Table 1

各系列机型对照 Contrast of different frame size												
Z系列(等同国家标准) Z series (equivalent to State standard)	1	2	3	4	5	6	7	8	9	10	11
X系列(等同天津标准) X series (equivalent to Tianjin standard)	1	2	3	4	5	6	7	8	9	10	11
B系列(等同上海标准) B series (equivalent to Shanghai standard)	09	10	11	12	13	14		15	16	17	18
B系列(等同化工部标准) B series (equivalent to Standard of Ministry of chemical Industry)		0	1	2	3	4		5	6	7	8
B系列(等同机械部标准) B series (equivalent to Standard of Ministry of Machine-Building Industry)		12	15	18	22	27		33	39	45	55
JXJ系列(等同江门标准) JXJ series (equivalent to Jiangmen standard)		0	1	2	3	4		5	6		

减速比 Drive Ratio	输入轴转速(r/min) 4极/6极 Output shaft rotating speed(r/min) four poles/six poles	输入功率(KW) Input Power(KW)	最大许用转矩N.m Allowed Maximum torque N.m	70	150	250	500	1000	2000	2300	3700	5700	12000	17000
11	136	91		0.55 0.25	0.75 0.55	2.2 1.5	4 3	7.5 5.5	11	15 11	18.5 15	22 18.5	45 37	55 45
17	88	59		0.55 0.25	0.75 0.55	1.5								
23	60	40		0.37 0.25	0.75 0.55	1.1	2.2	5.5	7.5					45
29	52	35		0.25	0.55	1.1	1.5	4		11 7.5	15	18.5 15	30 22	37
35	43	29		0.25	0.55 0.37	0.75	1.5	4 3	7.5 5.5		11		22	37
43	38	23		0.25	0.25	0.55	1.1	3 2.2	5.5 4	7.5 5.5	11 7.5	15 11	18.5	30
59	25	17					1.1 0.75	2.2 1.5	4 3	5.5	7.5 5.5	11 7.5	15	30 22
(71)	21	14					0.75	1.5	3 2.2	4	5.5	7.5 5.5	11	22 18.5
87	17	12							2.2	4 3	4	5.5 4	11	18.5 15

说明：1.表中15千瓦以下的均用4极电动机（1500转/分），18.5千以上的用6极电动机（1000转/分）。
2.非标减速机的输入功率，靠近标准减速比配置。

Instruction:

1. Below 15KW using four-pole motor (1500r/min), above 18.5KW using six-pole motor (1000r/min).
2.The non-standardized reducerís input power should be equipped close the standardized reducer.

德州向力减速机械有限公司0534-2609682

6、两级减速机的各系列机型对照及技术参数表

Double stage Reducer Contrast different Frame Size and technical data:

表二 Table 2

各系列机型对照 Contrast of different frame size												
	Z系列(等同国家标准) Z series (equivalent to State standard)	31	42	53	63	74	84	85	95	106	116	117
	X系列(等同天津标准) X series (equivalent to Tianjin standard)	31	42	53	63	74	84	85	95	106	116	117
	B系列(等同上海标准) B series (equivalent to Shanghai standard)	1109	120	131	141		152	153	163	174	184	
	B系列(等同化工部标准) B series (equivalent to Standard of Ministry of chemical Industry)		20	31	41		52	53	63	74	84	
	B系列(等同机械部标准) B series (equivalent to Standard of Ministry of Machine-Building Industry)		1812	2215	2715		3318	3322	3922	4527	5527	
	JXJ系列(等同江门标准) JXJ series (equivalent to Jiangmen standard)		20	31	41		52	53	63			
输入转速 Input speed		1500r/min										
输出转速 r/min Output Speed r/min	最大许用转矩N.m Allowed Maximum torque N.m / 输入功率(KW) Input Power(KW) / 减速比 Drive Ratio	250	500	1000	2000	2700	4500	4500	9000	12000	20000	20000
12.4	121 (11X11)	0.37 0.25	1.1 0.75	1.5 1.1	1.5 1.1	3 2.2	3 2.2	5.5 3	5.4 4	11 7.5	11 7.5	11 7.5
8.0	187 (17X11)	0.37 0.25	0.75 0.55	1.1 0.75	1.5 1.1	3 2.2	3 2.2	4 3	5.5 4	7.5 5.5	11 7.5	11 7.5
5.2	289 (17X17)	0.18 0.12	0.55 0.37	0.75 0.55	1.1 0.75	2.2 1.5	2.2 1.5	3 2.2	4 3	7.5 5.5	7.5 5.5	7.5 5.5
4.7	319 (29X11)		0.37	0.75 0.55	1.1 0.75	1.5 1.1	2.2 1.5	3 2.2	4 3	7.5 5.5	7.5 5.5	7.5 5.5
3.2	473 (43X11)		0.25	0.55 0.37	0.75 0.55	1.1 0.75	1.5 1.1	2.2 1.5	3 2.2	5.5 4	5.5 4	5.5 4
2.5	595 (35X17)		0.25	0.55 0.37	0.55 0.37	0.75 0.55	1.5 1.1	1.5 1.1	2.2 1.5	4 3	5.5 4	5.5 4
2.0	731 (43X17)		0.25	0.37	0.55 0.37	0.75 0.55	1.1 0.75	1.5 1.1	2.2 1.5	4 3	4 3	4 3
1.8	841 (29X29)		0.25	0.37	0.37	0.55	1.1 0.75	1.1	1.5 1.1	3 2.2	4 3	4 3
1.5	1003 (59X17)		0.25	0.37	0.37	0.55	0.75	1.1	1.5 1.1	2.2 1.5	3	3
1.2	1225 (35X35)		0.25	0.37	0.37	0.55	0.75	1.1	1.1	2.2 1.5	3	3
1.0	1505 (43X35)		0.25	0.37	0.37	0.55	0.75	1.1	1.1	1.5	3	3
0.8	1849 (43X43)		0.25	0.37	0.37	0.55	0.75	1.1	1.1	1.5	3	3
0.7	2065 (59X35)		0.25	0.37	0.37	0.55	0.75	1.1	1.1	1.5	3	3
0.6	2537 (59X43)		0.25	0.37	0.37	0.55	0.75	1.1	1.1	1.5	3	3
0.4	3481 (59X59)			0.37	0.37	0.55	0.75	1.1	1.1	1.5	3	3
0.3	5133 (87X59)			0.37	0.37	0.55	0.75	1.1	1.1	1.5	3	3

说明：选用减速机以输出轴转矩为依据，当所用的电动机功率大于表中值时，电动机不能全容量使用。

Instruction: Choosing the reducer should base on the torque of output shaft. When all the value of using motor are bigger than thoes in the table and the motor can't be used fully volume.

德州向力减速机械有限公司0534-2609682

五、摆线针轮减速机的外形安装尺寸
Cycloidal Reducers Contour overall and mounting dimensions

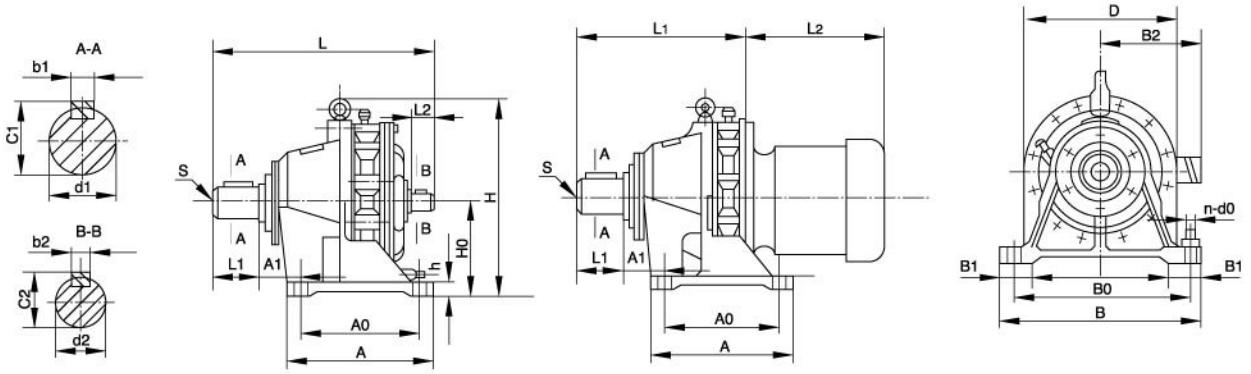

XW(D)型卧式单级外形安装及联接尺寸　天津标准 Tianjin standard
XW(D) type (horizontal single stage) overall and mounting dimensions

机型号 Frame size	中心高H0 Centre height	安装尺寸 Mounting dimensions								轴伸连接尺寸 Shaft connecting dimensions								外形尺寸 Overall dimensions							重量kg Weight kg
		A1	A0	B1	B0	h	s	地脚螺钉 Mounting screw		输出轴 Output shaft				输入轴 Input shaft				A	B	H	D	双轴型 Double shaft model	直联型 Direct connetion model		
								n	d0	d1	b1	c1	l1	d2	b2	c2	l2					L	L1	L2	
1	100	25	90	40	150	12	M8	4	12	28	8	31	35	15	5	17	25	120	180	175	150	202	141	见电动机外形尺寸一览表 See overall dimensions for electric motor	8
2	100	53	90	45	180	15	M8	4	12	25	8	28	34	15	5	17	25	120	210	175	168	218	155		14
3	140	95	100	55	250	20	M8	4	16	35	10	29	55	18	6	20.5	35	150	290	240	200	269	191		29
4	150	95	145	65	290	22	M10	4	16	45	14	48.5	74	22	6	24.5	40	195	330	275	240	340	255		45
5	160	115	150	75	370	25	M12	4	16	55	16	59	91	30	8	33	45	260	420	356	300	399	302		92
6	200	36	275	75	380	30	M12	4	18	65	18	69	89	35	10	38	54	335	430	425	340	470	358		131
7	220	36	320	85	420	30	M12	4	22	80	22	85	109	40	12	43	65	380	470	460	360	522	397		165
8	250	35	380	120	480	35	M16	4	22	90	25	95	120	45	14	48.5	70	440	530	529	430	581	440		245
9	290	45	480	120	560	40	M20	4	26	100	28	106	141	50	14	53.5	80	560	620	614	500	598	529		390
10	325	80	500	120	630	45	M24	6	30	110	28	116	150	55	16	59	100	600	690	706	580	806	608		564
11	420	122	330X2	160	800	50	2-M20	6	32	130	32	137	202	70	20	74.9	120	810	880	883	710	1022	811		1160

BW(Y)型卧式单级外形安装及联接尺寸　上海标准 Shanghai standard
BW(Y) type (horizontal single stage) overall and mounting dimensions

机型号 Frame size	中心高H0 Centre height	安装尺寸 Mounting dimensions								轴伸连接尺寸 Shaft connecting dimensions								外形尺寸 Overall dimensions							重量kg Weight kg
		A1	A0	B1	B0	h	s	地脚螺钉 Mounting screw		输出轴 Output shaft				输入轴 Input shaft				A	B	H	D	双轴型 Double shaft model	直联型 Direct connetion model		
								n	d0	d1	b1	c1	l1	d2	b2	c2	l2					L	L1	L2	
09	90	17	76	30	120	12	M8	4	11	22	6	24.5	30	15	5	17	25	100	144	160	140	203	142	见电动机外形尺寸一览表 See overall dimensions for electric motor	6.5
10	100	58	90	35	150	15	M8	4	11	30	8	33	35	15	5	17	25	120	185	168	168	218	155		14
11	120	69	110	55	240	15	M8	4	13	35	10	38	56	18	6	20.5	35	160	280	240	200	269	191		29
12	140	73	150	60	280	20	M10	4	13	45	14	48.5	71	22	6	24.5	40	200	320	275	240	340	255		45
13	160	78	200	75	340	25	M12	4	17	55	16	59	80	30	8	33	45	250	390	356	300	390	294		80
14	200	53	320	80	340	25	M12	4	22	70	20	74.5	102	35	10	38	54	380	400	425	340	481	369		135
15	240	39	380	80	420	32	M16	4	22	90	25	95	120	45	14	48.5	70	440	470	529	430	581	440		210
16A	280	45	440	90	500	40	M20	4	28	100	28	106	140	50	14	53.5	80	560	620	614	500	598	529		400
16	290	45	480	90	560	35	M20	4	28	100	28	106	140	50	14	53.5	80	560	620	614	500	598	529		400
17	325	80	550	120	630	40	M20	4	30	120	32	127	165	55	16	59	100	600	690	706	580	795	639		660
18	420	122	330X2	160	800	50	2-M20	6	32	140	36	148	210	70	20	74.5	120	810	880	883	710	1030	819		1180

注：1、表中所列尺寸单位为毫米；　2、d1 d2轴轴伸配合公差为h6。
Note: 1. The size unit in the table are milimeter;　2. Matching tolerance of shafts, h6.

德州向力减速机械有限公司0534-2609682

BW(Y)型卧式单级外形安装及联接尺寸 化工部标准 Standard of Minisrty of Chemical Indusrty
BW(Y) type. (horizontal Single stage) overall and mounting dimensions

机型中 Frame size	中心高HO Centre height	安装尺寸 Mounting dimensions								轴伸连接尺寸 Shaft connecting dimensions								外形尺寸 Overall dimensions							重量kg Weight kg
		A1	A0	B1	B0	h	s	地脚螺钉 Gronnd mounting screw		输出轴 Output shaft				输入轴 Input shaft				A	B	H	D	双轴型 Double shaft model	直联型 Direct connetion model		
								n	d0	d1	b1	c1	l1	d2	b2	c2	l2					L	L1	L2	
0	100	58	90	45	150	16	M8	4	12	30	8	33	35	15	5	17	25	120	185	134	168	211	155	见电动机外形尺寸一览表 See overall dimensions for electric motor	15
1	140	95	100	55	250	20	M8	4	14	35	10	38	58	18	6	20.5	35	150	290	284	200	282	216		22
2	150	95	145	60	290	22	M10	4	18	45	14	48.5	82	22	6	24.5	40	200	330	318	240	352	276		40
3	160	113	150	75	370	25	M12	4	18	55	16	59	82	30	8	33	45	238	410	360	300	422	316		73
4	200	35	275	80	380	30	M12	4	22	70	20	74.5	105	35	10	38	54	335	430	435	340	490	383		120
5	250	35	380	85	480	35	M16	4	28	90	25	95	130	45	14	48.5	70	440	530	542	430	629	464		185
6	290	45	480	90	560	40	M20	4	28	100	28	106	165	50	14	53.5	80	560	620	619	500	730	556		330
7	325	80	500	105	630	45	M24	4	28	110	28	116	165	55	16	59	100	600	690	706	580	783	594		564
8	420	122	330X2	140	800	50	2-M20	6	36	130	32	137	200	70	20	74.5	120	810	880	880	710	966	733		1160

BW(Y)型卧式单级外形安装及联接尺寸 机械部标准 Standard of Minisrty of Machine-Building Indusrty
BW(Y) type. (horizontal Single stage) overall and mounting dimensions

机型中 Frame size	中心高HO Centre height	安装尺寸 Mounting dimensions								轴伸连接尺寸 Shaft connecting dimensions								外形尺寸 Overall dimensions							重量kg Weight kg
		A1	A0	B1	B0	h	s	地脚螺钉 Mounting screw		输出轴 Output shaft				输入轴 Input shaft				A	B	H	D	双轴型 Double shaft model	直联型 Direct connetion model		
								n	d0	d1	b1	c1	l1	d2	b2	c2	l2					L	L1	L2	
12	100	58	90	45	150	16	M8	4	11	30	8	33	35	15	5	17	25	120	185	190	168	215	161	见电动机外形尺寸一览表 See overall dimensions for electric motor	18
15	140	95	100	55	250	20	M8	4	13	35	10	38	58	18	6	20.5	25	150	290	284	200	282	216		32
18	150	95	145	60	290	22	M10	4	17	45	14	48.5	82	22	6	24.5	40	195	330	318	240	352	276		40
22	160	113	150	75	370	25	M12	4	17	55	16	59	82	30	8	33	45	238	410	360	300	422	316		73
27	200	35	275	80	380	30	M12	4	22	70	20	74.5	105	35	10	38	54	335	430	435	340	490	383		120
33	250	35	380	85	480	35	M16	4	26	90	25	95	130	45	14	48.5	70	440	530	542	430	629	464		185
39	290	45	480	90	560	40	M20	4	26	100	28	106	165	50	14	53.5	80	560	620	619	500	730	556		330
45	325	80	500	105	630	45	M24	4	30	110	28	116	165	55	16	59	100	600	690	706	580	783	594		620
55	400	122	330X2	140	800	50	2-M20	6	36	130	32	137	200	70	20	74.5	120	810	880	880	710	966	733		1180

JXJW型卧式双级外形安装及联接尺寸 江门标准 Jiangmen standard
JXJW type. (horizontal Single stage) overall and mounting

机型中 Frame size	中心高HO Centre height	安装尺寸 Mounting dimensions								轴伸连接尺寸 Shaft connecting dimensions								外形尺寸 Overall dimensions							重量kg Weight kg
		A1	A0	B1	B0	h	s	地脚螺钉 Mounting screw		输出轴 Output shaft				输入轴 Input shaft				A	B	H	D	双轴型 Double shaft model	直联型 Direct connetion model		
								n	d0	d1	b1	c1	l1	d2	b2	c2	l2					L	L1	L2	
0	100	45	90	45	180	15	M8	4	11	25	8	28	34	15	5	17	25	120	210	175	150	218	155	见电动机外形尺寸一览表 See overall dimensions for electric motor	15
1	140	55	100	55	250	20	M8	4	16	35	12	38	58	18	6	20.5	35	150	290	284	200	269	191		25
2	140	60	180	60	285	20	M10	4	16	50	14	53.5	70	22	6	24.5	40	230	335	310	240	332	251		45
3	160	60	220	75	350	25	M12	4	18	65	18	69	110	30	8	33	45	280	410	355	300	428	332		86
4	190	72	270	80	400	25	M12	4	25	80	22	85	130	35	10	38	54	350	460	430	340	509	384		125
5	250	85	380	80	480	35	M16	4	25	90	25	95	130	45	14	48.5	70	440	530	540	430	603	462		190
6	290	90	480	90	560	40	M20	4	28	100	28	106	165	50	14	53.5	80	560	620	614	500	723	554		400

注：1、表中所列尺寸单位为毫米；　　2、d1 d2轴轴伸配合公差为h6。
Note: 1. The size unit in the table are milimeter;　　2. Matching tolerance of shafts, h6.

德州向力减速机械有限公司0534-2609682

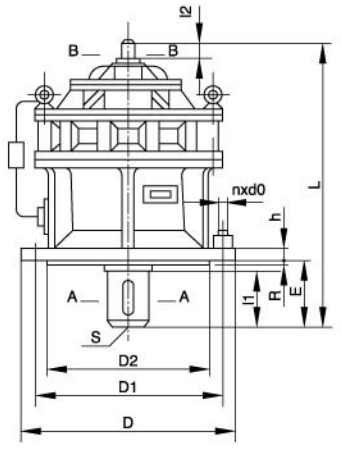

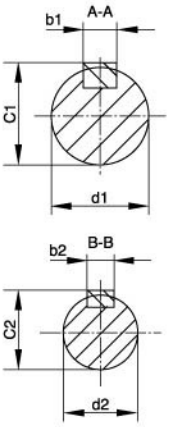

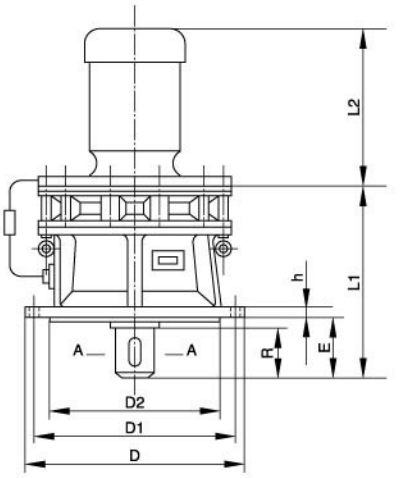

XL(D)型立式单级外形安装及联接尺寸　天津标准 Tianjing standard
XL(D) type (vertically single stage) overall and mounting dimensions

机型 Frame size	安装尺寸 Mounting dimensions								轴伸连接尺寸 Shaft connecting dimensions								外形尺寸 Overall dimensions				重量 Weight kg
	D1	D2	E	h	R	S	地脚螺钉 Mounting screw		输出轴 Output shaft				输入轴 Input shaft				D	双轴型 Double shaft model	直联型 Direct connetion model		
							n	d0	d1	b1	c1	l1	d2	b2	c2	l2		L	L1	L2	
1	134	110	48	9	3	M8	4	12	28	8	31	35	15	5	17	25	160	202	141	见电动机外形尺寸一览表 See overall dimensions for electric motor	8
2	160	130	42	12	3	M8	6	12	25	8	28	34	15	5	17	25	180	218	155		13
3	200	170	50	15	4	M8	6	12	35	10	38	45	18	6	20.5	35	230	269	191		26
4	230	200	79	15	4	M10	6	12	45	14	48.5	64	22	6	24.5	40	260	340	255		38
5	310	270	93	20	4	M12	6	12	55	16	59	79	30	8	33	45	340	399	302		93
6	360	316	94	22	5	M12	8	16	65	18	69	80	35	10	38	54	400	470	358		138
7	390	345	114	22	5	M12	8	18	80	22	85	98	40	12	43	65	430	522	397		160
8	450	400	112	30	6	M16	12	18	90	25	95	110	45	14	48.5	70	490	581	440		240
9	520	455	170	35	8	M20	12	22	100	28	103	130	50	14	53.5	80	580	698	529		370
10	590	520	174	40	10	M24	12	22	110	28	116	140	55	16	59	100	650	806	608		622
11	800	680	210	45	10	2-M20	12	38	130	32	137	184	70	20	74.5	120	880	1042	811		1210

JXJL型立式单级外形安装及联接尺寸　江门标准 Jiangmen standard
JXJL type (vertically single stage) overall and mounting dimensions

机型 Frame size	安装尺寸 Mounting dimensions								轴伸连接尺寸 Shaft connecting dimensions								外形尺寸 Overall dimensions				重量 Weight kg
	D1	D2	E	h	R	S	地脚螺钉 Mounting screw		输出轴 Output shaft				输入轴 Input shaft				D	双轴型 Double shaft model	直联型 Direct connetion model		
							n	d0	d1	b1	c1	l1	d2	b2	c2	l2		L	L1	L2	
0	134	110	40	10	3	M8	6	11	25	8	28	34	15	5	17	25	190	218	155	见电动机外形尺寸一览表 See overall dimensions for electric motor	15
1	200	170	65	16	4	M8	6	14	35	12	38	57	18	6	20.5	35	230	282	198		25
2	230	200	66	18	4	M10	6	14	50	14	53.5	68	22	6	24.5	40	260	352	251		45
3	310	270	89	25	4	M12	6	14	65	18	69	82	30	8	33	45	340	428	332		80
4	360	316	125	25	5	M12	8	20	80	22	85	115	35	10	38	54	400	520	394		115
5	450	400	140	30	6	M16	12	20	90	25	95	130	45	14	48.5	70	495	629	462		184
6	520	455	177	35	8	M20	12	20	100	28	106	165	50	14	53.5	80	580	736	554		380

注：1、表中所列尺寸单位为毫米；　2、d1 d2轴轴伸配合公差为h6。
Note: 1. The size unit in the table are milimeter;　2. Matching tolerance of shafts, h6.

德州向力减速机械有限公司0534-2609682

BL(Y)型卧式单级外形安装及联接尺寸 机械部标准 Standard of Minisrty of Machistry-Building Indusrty

BL(Y) type. (horizontal Single stage) overall and mounting dimensions

机型号 Frame size	安装尺寸 Mounting dimensions								轴伸连接尺寸 Shaft connecting dimensions								外形尺寸 Overall dimensions				重量kg Weight kg
	D1	D2	E	h	R	S	地脚螺钉 Mounting screw		输出轴 Output shaft				输入轴 Input shaft				D	双轴型 Double shaft model	直联型 Direct connetion model		
							n	d0	d1	b1	c1	l1	d2	b2	c2	l2		L	L1	L2	
12	160	140	39	12	3	M8	4	11	30	8	33	35	15	5	17	25	190	215	161	见电动机外形尺寸一览表 See overall dimensions for electric motor	15
15	200	170	65	16	4	M8	6	14	35	10	38	58	18	6	20.5	35	230	282	216		45
18	230	200	89	20	4	M10	6	14	45	14	48.5	81	22	6	24.5	40	260	352	276		64
22	310	270	89	22	4	M12	6	14	55	16	59	82	30	8	33	45	340	422	316		111
27	360	316	114	26	5	M12	8	18	70	20	74.5	105	35	10	38	54	400	490	383		171
33	450	400	140	30	6	M16	12	22	90	25	95	130	45	14	48.5	70	490	629	464		290
39	520	455	177	35	8	M20	12	22	100	28	106	165	50	14	53.5	80	580	736	556		400
45	590	520	180	40	10	M20	12	28	110	28	116	165	55	16	59	100	650	783	594		612
55	800	680	215	45	10	2-M20	12	34	130	32	137	200	70	20	74.5	120	880	966	733		1116

BY(Y)型卧式单级外形安装及联接尺寸 化工部标准 Standard of Minisrty of Chemical Indusrty

BY(Y) type. (horizontal single stage) overall and mounting dimensions

机型号 Frame size	安装尺寸 Mounting dimensions								轴伸连接尺寸 Shaft connecting dimensions								外形尺寸 Overall dimensions				重量kg Weight kg
	D1	D2	E	h	R	S	地脚螺钉 Mounting screw		输出轴 Output shaft				输入轴 Input shaft				D	双轴型 Double shaft model	直联型 Direct connetion model		
							n	d0	d1	b1	c1	l1	d2	b2	c2	l2		L	L1	L2	
0	160	140	39	12	3	M8	4	11	30	8	33	35	15	5	17	25	190	218	155	见电动机外形尺寸一览表 See overall dimensions for electric motor	20
1	200	170	65	16	4	M8	6	14	35	10	38	58	18	6	20.5	35	230	282	216		30
2	230	200	89	20	4	M10	6	14	45	14	48.5	82	22	6	24.5	40	260	352	276		50
3	310	270	89	22	4	M12	6	16	55	16	59	82	30	8	33	45	340	422	316		90
4	360	316	114	26	5	M16	8	18	70	20	74.5	105	35	10	38	54	400	490	383		130
5	450	400	140	30	6	M16	12	22	90	25	95	130	45	14	48.5	70	490	629	464		250
6	520	455	177	35	8	M20	12	22	100	28	106	165	50	14	53.8	80	580	736	556		395
7	590	520	180	40	10	M20	12	28	110	28	116	165	55	16	59	100	650	783	594		605
8	800	680	215	45	10	2-M20	12	34	130	32	137	200	70	20	74.5	120	880	966	733		1180

BY(Y)型卧式单级外形安装及联接尺寸 化工部标准 Standard of Minisrty of Chemical Indusrty

BY(Y) type(horizontal single stage) overall and mounting dimensions

机型号 Frame size	安装尺寸 Mounting dimensions								轴伸连接尺寸 Shaft connecting dimensions								外形尺寸 Overall dimensions				重量kg Weight kg
	D1	D2	E	h	R	S	地脚螺钉 Mounting screw		输出轴 Output shaft				输入轴 Input shaft				D	双轴型 Double shaft model	直联型 Direct connetion model		
							n	d0	d1	b1	c1	l1	d2	b2	c2	l2		L	L1	L2	
09	134	110	35	10	3	M8	4	11	22	6	24.5	30	15	5	17	25	160	102	141	见电动机外形尺寸一览表 See overall dimensions for electric motor	6
10	160	140	40	10	3	M8	4	11	30	8	33	35	15	5	17	25	190	218	155		13
11	200	170	60	12	4	M8	6	11	35	10	38	45	18	6	20.5	35	230	269	191		22
12	230	200	70	15	4	M10	6	11	45	14	48.5	61	22	6	24.5	40	260	321	255		40
13	310	270	80	20	5	M12	6	13	55	16	59	75	30	8	33	45	340	300	302		75
14	360	320	99	22	5	M12	8	15	70	20	74.5	92	35	10	38	54	400	463	358		120
15	450	400	115	30	5	M16	12	18	90	25	95	108	45	14	48.5	70	490	584	443		180
16	520	455	177	35	8	M20	12	22	100	28	106	165	50	14	53.5	80	580	736	527		380
17	590	520	180	40	10	M20	12	24	120	32	127	165	55	16	59	100	650	806	608		611
18	680	800	215	45	10	2-M20	12	34	140	36	148	200	70	20	74.5	120	880	1042	811		1170

注：1、表中所列尺寸单位为毫米；
Note: 1. The size unit in the table are milimeter;

2、d1 d2轴轴伸配合公差为h6。
2. Matching tolerance of shafts, h6.

德州向力减速机械有限公司0534-2609682

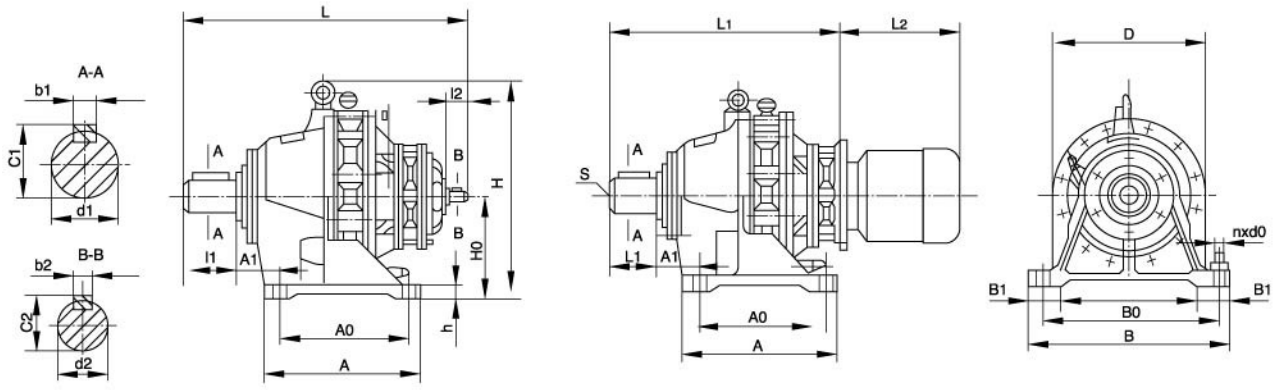

XWE(D)型卧式双级外形安装及联接尺寸　天津标准 Tianjin standard
XWE(D) type. (horizontal Double stage) overall and mounting dimensions

机型号 Frame size	中心高 H0 Centre height	安装尺寸 Mounting dimensions								轴伸连接尺寸 Shaft connecting dimensions								外形尺寸 Overall dimensions							重量kg Weight kg
		A1	A0	B1	B0	h	s	地脚螺钉 Mounting screw		输出轴 Output shaft				输入轴 Input shaft				A	B	H	D	双轴型 Double shaft model	直联型 Direct connetion model		
								n	d0	d1	b1	c1	l1	d2	b2	c2	l2					L	L1	L2	
31	140	96	100	55	250	20	M8	4	16	35	10	38	55	15	5	17	25	150	290	240	200	310	258	见电动机外形尺寸一览表 See overall dimensions for electric motor	37
42	150	95	145	65	290	22	M10	4	16	45	14	48.5	74	15	5	17	25	195	330	275	240	384	326		75
53	160	115	150	75	370	25	M12	4	18	55	16	59	91	18	6	20.5	35	260	420	356	300	457	383		94
63	200	36	275	75	380	30	M12	4	22	65	18	69	89	18	6	20.5	35	335	430	425	340	519	447		148
74	220	36	320	85	420	30	M12	4	22	80	22	85	109	22	6	24.5	40	380	470	460	360	589	508		193
84	250	35	380	120	480	35	M16	4	22	90	25	95	120	22	6	24.5	40	440	530	529	430	633	552		270
85	250	35	380	120	480	35	M16	4	22	90	25	95	120	30	8	33	45	440	530	529	430	656	566		310
95	290	45	480	120	560	40	M20	4	26	100	28	106	141	30	8	33	45	560	620	614	500	745	655		485
106	325	80	500	120	630	45	M24	6	30	110	28	116	150	35	10	38	54	600	690	706	580	855	750		650
116	420	122	330X2	160	800	50	2-M20	6	32	130	32	137	202	35	10	38	54	810	880	883	710	1066	958		1232
117	420	122	330X2	160	800	50	2-M20	6	32	130	32	137	202	40	12	43	65	810	880	883	710	1081	963		1280

BWE(Y)型卧式双级外形安装及联接尺寸　上海标准 Shanghai standard
BWE(Y) type. (horizontal Double stage) overall and mounting dimensions

机型号 Frame size	中心高 H0 Centre height	安装尺寸 Mounting dimensions								轴伸连接尺寸 Shaft connecting dimensions								外形尺寸 Overall dimensions							重量kg Weight kg
		A1	A0	B1	B0	h	s	地脚螺钉 Mounting screw		输出轴 Output shaft				输入轴 Input shaft				A	B	H	D	双轴型 Double shaft model	直联型 Direct connetion model		
								n	d0	d1	b1	c1	l1	d2	b2	c2	l2					L	L1	L2	
120	160	78	200	75	340	25	M12	4	17	55	16	59	89	15	5	17	25	250	390	356	300	423	367	见电动机外形尺寸一览表 See overall dimensions for electric motor	82
131	160	78	200	75	340	25	M12	4	22	55	16	59	89	18	6	20.5	35	250	390	356	300	457	383		100
141	200	53	320	80	340	25	M12	4	22	70	20	74.5	102	18	6	20.5	35	330	400	425	340	519	447		153
152	240	39	380	80	420	32	M16	4	22	90	25	95	120	22	6	24.5	40	440	470	529	430	633	552		245
153	240	39	330	80	420	32	M16	4	22	90	25	95	120	30	8	33	45	440	470	529	430	656	566		265
163	290	45	480	90	560	35	M20	4	28	100	28	106	140	30	8	33	45	560	620	614	500	745	655		460
174	325	80	500	120	630	40	M20	4	30	120	32	127	165	35	10	38	54	600	690	706	580	855	750		710
184	420	122	330X2	160	800	50	2-M20	6	32	140	36	148	210	35	10	38	54	810	880	883	410	1071	959		1270

注：1、表中所列尺寸单位为毫米；　2、d1 d2轴轴伸配合公差为h6。
Note: 1. The size unit in the table are milimeter;　2. Matching tolerance of shafts, h6.

德州向力减速机械有限公司0534-2609682

BWE(Y)型卧式双级外形安装及联接尺寸 化工部标准 Standard of Minisrty of Chemical Indusrty
BWE(Y) type. (horizontal Double stage) overall and mounting dimensions

机型 Frame size	中心高 H0 Centre height	安装尺寸 Mounting dimensions								轴伸连接尺寸 Shaft connecting dimensions								外形尺寸 Overall dimensions							重量kg Weight kg
		A1	A0	B1	B0	h	s	地脚螺钉 Mounting screw		输出轴 Output shaft				输入轴 Input shaft				A	B	H	D	双轴型 Double shaft model	直联型 Direct connetion model		
								n	d0	d1	b1	c1	l1	d2	b2	c2	l2					L	L1	L2	
31	160	113	150	75	370	25	M12	4	18	55	16	59	82	18	6	20.5	35	288	410	360	300	473	407	见电动机外形尺寸一览表 See overall dimensions for electric motor	88
41	200	35	275	80	380	30	M12	4	22	70	20	74.5	105	18	6	20.5	35	335	430	435	340	540	474		142
42	200	35	275	80	380	30	M12	4	22	70	20	74.5	105	22	6	24.5	40	335	430	435	340	586	520		145
52	250	35	380	85	480	35	M16	4	28	90	25	95	130	22	6	24.5	40	440	530	542	430	658	582		263
53	250	35	380	85	480	35	M16	4	28	90	25	95	130	30	8	33	45	440	530	542	430	708	601		268
63	290	45	480	90	560	40	M20	4	28	100	28	106	165	30	8	33	45	560	620	619	500	796	691		453
74	325	80	500	105	630	45	M20	4	28	110	28	116	165	35	10	38	54	600	690	706	580	856	749		691
84	420	122	330X2	140	800	50	2-M20	6	36	130	32	137	200	35	10	38	54	810	880	880	710	998	891		1260

BWE(Y)型卧式双级外形安装及联接尺寸 机械部标准 Standard of Minisrty of Machine-Building Indusrty
BWE(Y) type. (horizontal Double stage) overall and mounting dimensions

机型 Frame size	中心高 H0 Centre height	安装尺寸 Mounting dimensions								轴伸连接尺寸 Shaft connecting dimensions								外形尺寸 Overall dimensions							重量kg Weight kg
		A1	A0	B1	B0	h	s	地脚螺钉 Mounting screw		输出轴 Output shaft				输入轴 Input shaft				A	B	H	D	双轴型 Double shaft model	直联型 Direct connetion model		
								n	d0	d1	b1	c1	l1	d2	b2	c2	l2					L	L1	L2	
1812	150	95	145	60	290	22	M10	4	17	45	14	48.5	82	15	5	17	25	195	330	318	240	384	326	见电动机外形尺寸一览表 See overall dimensions for electric motor	75
2215	160	113	150	75	370	25	M12	4	17	55	16	59	82	18	6	20.5	35	238	410	360	300	473	407		100
2715	200	35	275	80	380	30	M12	4	22	70	20	74.5	105	18	6	20.5	35	335	430	435	340	540	474		150
3322	250	35	380	85	480	35	M16	4	26	90	25	95	130	30	8	33	45	440	530	542	430	706	691		364
3922	290	45	480	90	560	40	M20	4	26	100	28	106	165	30	8	33	45	560	620	619	500	796	691		472
4527	325	80	500	105	630	45	M20	4	34	110	28	116	165	35	10	38	54	600	690	706	580	856	749		726
5527	420	122	330X2	140	800	50	2-M20	6	36	130	32	137	200	35	10	38	54	810	880	880	710	1076	975		1286

JXJWE型卧式双级外形安装及联接尺寸 江门标准 Jiangmen standard
JXJWE type. (horizontal Double stage) overall and mounting dimensions

机型 Frame size	中心高 H0 Centre height	安装尺寸 Mounting dimensions								轴伸连接尺寸 Shaft connecting dimensions								外形尺寸 Overall dimensions							重量kg Weight kg
		A1	A0	B1	B0	h	s	地脚螺钉 Mounting screw		输出轴 Output shaft				输入轴 Input shaft				A	B	H	D	双轴型 Double shaft model	直联型 Direct connetion model		
								n	d0	d1	b1	c1	l1	d2	b2	c2	l2					L	L1	L2	
20	140	60	180	60	285	20	M10	4	16	50	14	53.5	70	15	5	17	25	230	335	310	240	382	323	见电动机外形尺寸一览表 See overall dimensions for electric motor	60
31	160	60	220	75	350	25	M12	4	18	65	18	69	110	18	6	20.5	35	280	410	355	300	518	447		105
41	190	72	270	80	400	25	M12	4	25	80	22	85	130	18	6	20.5	35	350	460	430	340	565	498		150
52	250	85	380	80	480	35	M16	4	25	90	25	95	130	22	6	24.5	40	440	530	540	430	658	581		237
53	250	85	380	80	480	35	M16	4	25	90	25	95	130	30	8	33	45	440	530	540	430	703	600		270
63	290	90	480	90	560	40	M20	4	28	100	28	106	165	30	8	33	45	560	620	614	500	790	667		460

注：1、表中所列尺寸单位为毫米；
Note: 1. The size unit in the table are milimeter;

2、d1 d2轴轴伸配合公差为h6。
2. Matching tolerance of shafts, h6.

德州向力减速机械有限公司0534-2609682

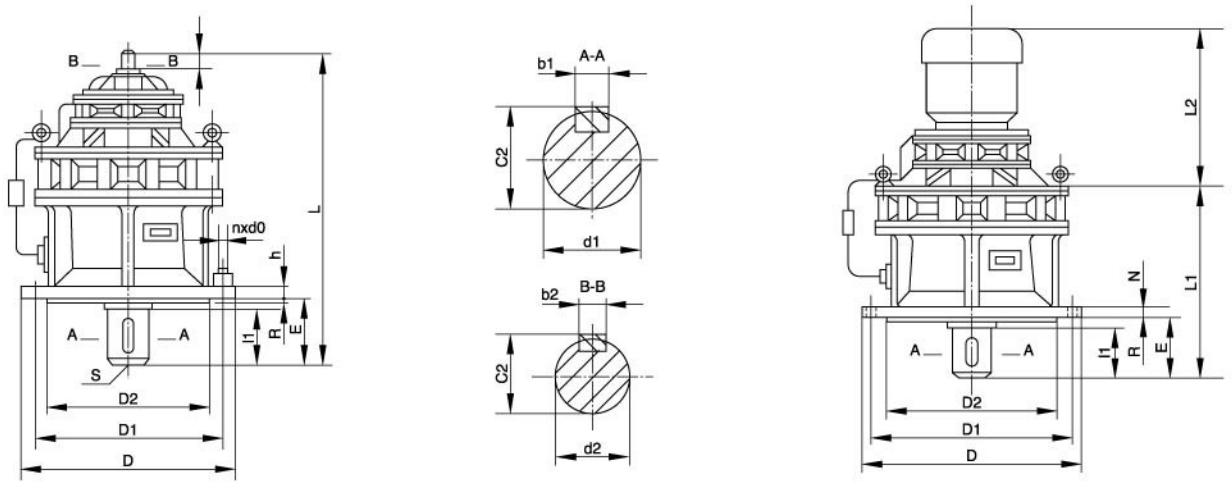

XLE(D)型立式双级外形安装及联接尺寸　天津标准 Tianjing standard
XLE(D) type. (vertically. double stage) overall and mounting dimensions

机型 Frame size	安装尺寸 Mounting dimensions								轴伸连接尺寸 Shaft connecting dimensions								外形尺寸 Overall dimensions				重量 Weight kg
	D1	D2	E	h	R	S	地脚螺钉 Mounting screw		输出轴 Output shaft				输入轴 Input shaft				D	双轴型 Double shaft model	直联型 Direct connetion model		
							n	d0	d1	b1	c1	l1	d2	b2	c2	l2		L	L1	L2	
31	200	170	50	15	4	M8	6	12	35	10	38	45	15	5	17	25	230	310	258	见电动机外形尺寸一览表 See overall dimensions for electric motor	35
42	230	200	79	15	4	M10	6	12	45	14	48.5	64	15	5	17	25	260	384	326		75
53	310	270	92	20	4	M12	6	12	55	16	59	79	18	6	20.5	35	340	457	383		95
63	360	316	92	22	5	M12	8	16	65	18	69	80	18	6	20.5	35	400	519	447		149
74	390	345	114	22	5	M12	8	18	80	22	85	98	22	6	24.5	40	430	589	508		193
84	450	400	112	30	6	M16	12	18	90	25	95	110	22	6	24.5	40	490	633	552		280
85	450	400	112	30	6	M16	12	18	90	25	95	110	30	8	33	45	490	656	566		310
95	520	455	170	35	8	M20	12	22	100	28	106	130	30	8	33	45	580	745	655		495
106	590	520	175	40	10	M20	12	22	110	28	116	140	35	10	38	54	650	855	754		667
117	800	680	210	45	10	2-M20	12	38	130	32	137	184	40	12	43	65	880	1081	963		1290

JXJLE型卧式双级外形安装及联接尺寸　江门标准 Jiangmen standard
JXJLE type. (vertically. double stage) overall and mounting dimensions

机型 Frame size	安装尺寸 Mounting dimensions								轴伸连接尺寸 Shaft connecting dimensions								外形尺寸 Overall dimensions				重量 Weight kg
	D1	D2	E	h	R	S	地脚螺钉 Mounting screw		输出轴 Output shaft				输入轴 Input shaft				D	双轴型 Double shaft model	直联型 Direct connetion model		
							n	d0	d1	b1	c1	l1	d2	b2	c2	l2		L	L1	L2	
20	230	200	66	18	4	M10	6	14	50	14	53.5	68	15	5	17	25	260	382	323	见电动机外形尺寸一览表 See overall dimensions for electric motor	62
31	310	270	89	25	4	M12	6	14	65	18	69	82	18	6	20.5	35	340	515	448		105
41	360	316	125	25	5	M12	8	20	80	22	85	115	18	6	20.5	35	400	565	498		155
42	360	316	125	25	5	M12	8	20	80	22	85	115	22	6	24.5	40	400	581	504		165
52	450	400	140	30	6	M16	12	20	90	25	95	130	22	6	24.5	40	495	653	581		265
53	450	400	140	30	6	M16	12	20	90	25	95	130	30	8	33	45	495	703	600		285
63	520	455	177	35	8	M20	12	20	100	28	106	165	30	8	33	45	580	796	673		470

注：1、表中所列尺寸单位为毫米；　2、d1 d2轴轴伸配合公差为h6。
Note: 1. The size unit in the table are milimeter;　2. Matching tolerance of shafts, h6.

德州向力减速机械有限公司0534-2609682

BLE(Y)型立式双级外形安装及联接尺寸 上海标准 Shanghai standard
BLE(Y) type. (vertically. double stage) overall and mounting dimensions

机型号 Frame size	安装尺寸 Mounting dimensions								轴伸连接尺寸 Shaft connecting dimensions								外形尺寸 Overall dimensions				重量kg Weight kg
	D1	D2	E	h	R	S	地脚螺钉 Mounting screw		输出轴 Output shaft				输入轴 Input shaft				D	双轴型 Double shaft model	直联型 Direct connetion model		
							n	d0	d1	b1	c1	l1	d2	b2	c2	l2		L	L1	L2	
120	230	200	80	15	4	M10	6	11	45	14	48.5	64	15	5	17	25	260	368	312	见电动机外形尺寸一览表 See overall dimensions for electric motor	75
130	310	270	94	20	5	M12	6	13	55	16	59	79	15	5	17	25	340	423	372		87
131	310	270	94	20	5	M12	6	13	55	16	59	79	20	6	22.5	35	340	453	392		95
141	360	320	106	22	5	M12	8	15	70	20	74.5	92	20	6	22.5	35	400	521	460		145
152	450	400	115	30	5	M16	12	18	90	25	95	110	22	6	24.5	40	490	616	542		215
153	450	400	115	30	5	M16	12	18	90	25	95	110	30	8	33	45	490	656	566		230
163	520	455	177	35	8	M20	12	24	100	28	106	165	30	8	33	45	580	781	685		440
174	590	520	180	40	10	M20	12	24	120	32	127	165	35	10	38	54	650	865	760		700
184	680	800	215	45	10	2-M20	12	34	140	36	148	200	35	10	38	54	880	1081	966		1280

BLE(Y)型立式双级外形安装及联接尺寸 机械部标准 Standard of Ministry of Machine-Building Industry
BLE(Y) type. (vertically. double stage) overall and mounting dimensions

机型号 Frame size	安装尺寸 Mounting dimensions								轴伸连接尺寸 Shaft connecting dimensions								外形尺寸 Overall dimensions					重量kg Weight kg
	D1	D2	E	h	R	S	地脚螺钉 Mounting screw		输出轴 Output shaft				输入轴 Input shaft				D	双轴型 Double shaft model	直联型 Direct connetion model			
							n	d0	d1	b1	c1	l1	d2	b2	c2	l2		L	L1	L2	B	
1812	230	200	89	20	4	M10	6	14	45	14	48.5	82	15	5	17	25	260	384	326	见电动机外形尺寸一览表 See overall dimensions for electric motor		72
2215	310	270	89	22	4	M12	6	14	55	16	59	82	18	6	20.5	35	340	473	407			94
2715	360	316	114	26	5	M12	8	18	70	20	74.5	105	18	6	20.5	35	400	540	747			150
3318	450	400	140	30	6	M16	12	22	90	25	95	130	22	6	24.5	40	490	633	552			280
3322	450	400	140	30	6	M16	12	22	90	25	95	130	30	8	33	45	490	706	601			364
3922	520	455	177	35	8	M20	12	22	100	28	106	165	30	8	33	45	580	796	691			472
4527	590	520	180	40	10	M20	12	28	110	28	116	165	35	10	38	54	650	886	749			696
5527	800	680	215	45	10	2-M20	12	34	130	32	137	200	35	10	38	54	880	998	891			1220

BLE(Y)型立式双级外形安装及联接尺寸 化工部标准 Standard of Ministry of Chemical Industry
BLE(Y) type. (vertically. double stage) overall and mounting dimensions

机型号 Frame size	安装尺寸 Mounting dimensions								轴伸连接尺寸 Shaft connecting dimensions								外形尺寸 Overall dimensions					重量kg Weight kg
	D1	D2	E	h	R	S	地脚螺钉 Mounting screw		输出轴 Output shaft				输入轴 Input shaft				D	双轴型 Double shaft model	直联型 Direct connetion model			
							n	d0	d1	b1	c1	l1	d2	b2	c2	l2		L	L1	L2	B	
20	230	200	89	20	4	M10	6	14	45	14	48.5	82	15	5	17	25	260	384	326	见电动机外形尺寸一览表 See overall dimensions for electric motor		75
31	310	270	89	22	4	M12	6	16	55	16	59	82	18	6	20.5	35	340	473	407			94
41	360	316	114	26	5	M12	8	18	70	20	74.5	105	18	6	20.5	35	400	525	458			144
52	450	400	140	30	6	M16	12	22	90	25	95	130	22	6	24.5	40	490	633	552			263
53	450	400	140	30	6	M16	12	22	90	25	95	130	30	8	33	45	490	706	601			274
63	520	455	177	35	8	M20	12	24	100	28	106	165	30	8	33	45	580	769	691			450
74	590	520	180	40	10	M20	12	28	110	28	116	165	35	10	38	54	650	856	749			777
84	800	680	215	45	10	2-M20	12	34	130	32	137	200	35	10	38	54	880	998	891			1240

注：1、表中所列尺寸单位为毫米；
Note: 1. The size unit in the table are milimeter;

2、d1 d2轴轴伸配合公差为h6。
2. Matching tolerance of shafts, h6.

德州向力减速机械有限公司0534-2609682